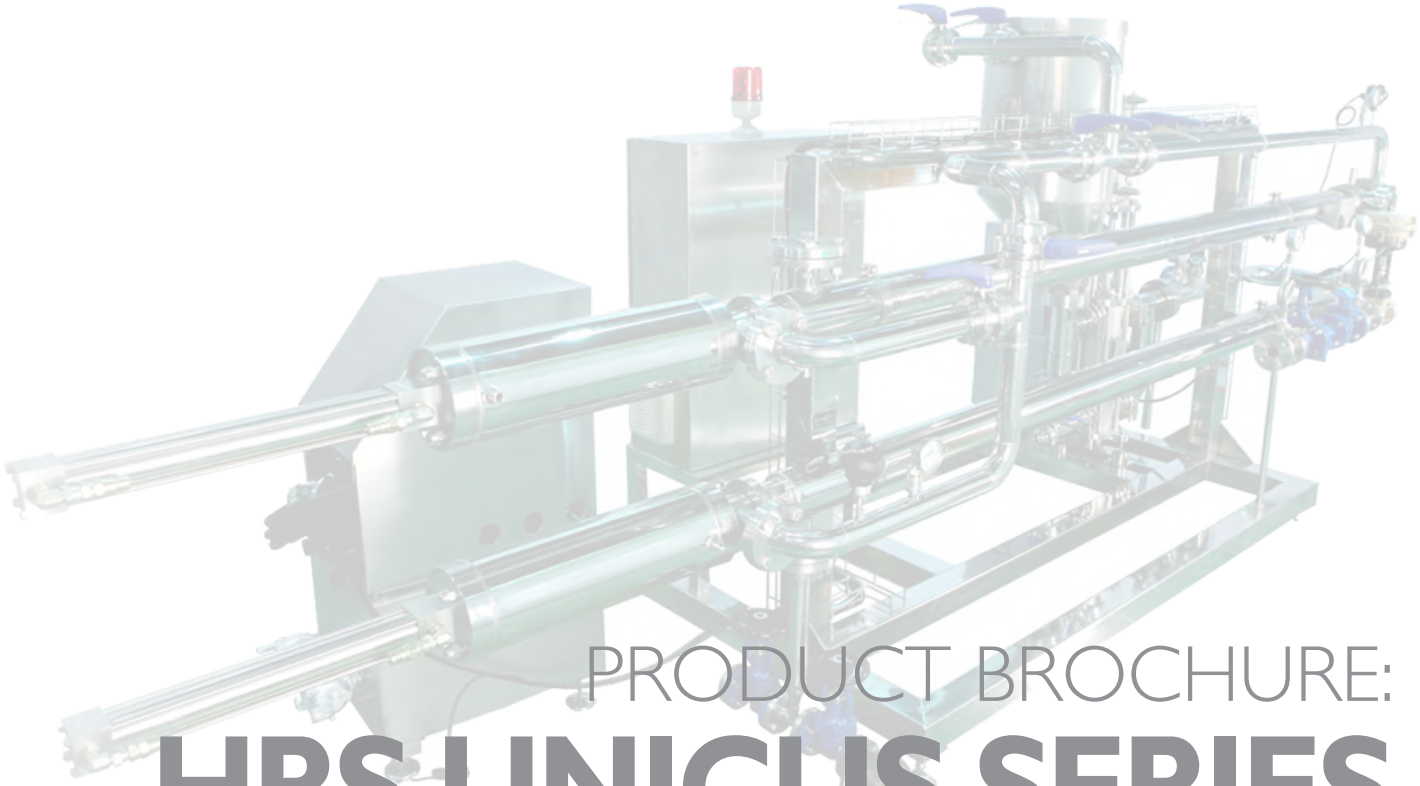

PRODUCT BROCHURE:

HRS UNICUS SERIES

SCRAPED SURFACE HEAT EXCHANGERS

HRS UNICUS SERIES

HRS UNICUS SERIES - FOOD

The solution for applications with delicate products

The patented design is based on a traditional shell and tube heat exchanger with scraping elements inside each tube. The reciprocating movement of the scrapers mixes the fluid whilst cleaning the heat exchange surface. This keeps heat transfer high and reduces downtime. In addition, the scraping movements introduces turbulence in the fluid increasing levels of heat transfer.

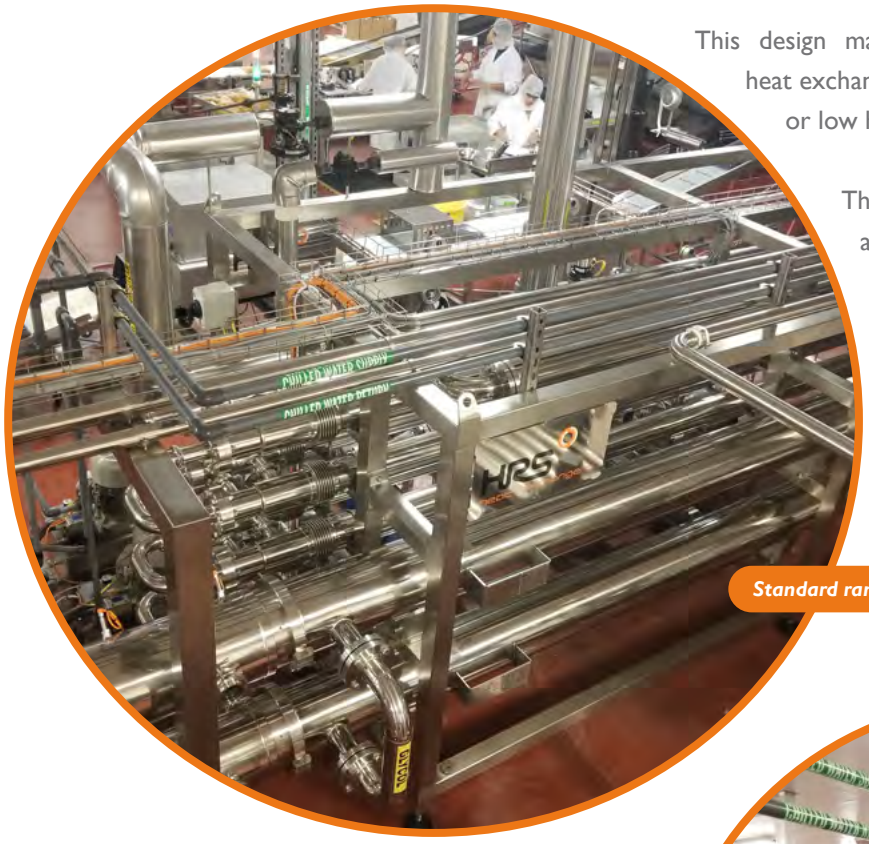

This design makes the HRS Unicus Series the ideal heat exchanger for hygienic applications where fouling or low heat transfer is a limiting factor.

The gentle movement of the scrapers allows the system to be used with delicate products, such as whole fruit or vegetable pieces, without destroying the integrity.

Standard range up to 10m²

The effect of scraping is twofold, it ensures potential fouling is minimised by keeping the tube wall clean whilst enhancing turbulance and increasing the heat transfer rate. This patented design makes the Unicus an ideal heat exchanger for high fouling and viscous fluids.

The HRS Unicus installed in a sauce cooling skid

HRS UNICUS SERIES - ENVIRONMENTAL

A special version of the Unicus has been developed for use in environmental applications. The patented design consists of a shell and tube heat exchanger with scraping rods in the interior tubes. During evaporation, fouling and reduced heat transfer can become a problem for traditional evaporators.

With the Unicus, the scraping action keeps the heat transfer surface clean and maintains high heat transfer, allowing the Unicus to concentrate to levels where traditional technologies fail.

The Unicus when used as an evaporator can be applied in a multi-effect setup or in combination with mechanical vapour recompression. The scrapers allow continuous operation and increases uptime of the plant.

The Unicus evaporator can operate under vacuum and is ideally suited for volume reduction of environmental waste and reducing transportation costs.

Unicus Series models are available from just one tube up to 198 tubes. This gives the Unicus Series heat transfer areas between 0.7 and 180m^2.

Heat transfer area up to 180m^2

HRS UNICUS SERIES

FEATURES

HYDRAULIC DRIVE CYLINDER

This part provides the energy that moves the scraper bars. The cylinder can be pneumatic (smaller models) or hydraulic (bigger models).

SEPARATION CHAMBER

This separates the shell and tube heat exchanger from the drive cylinder that moves the scraper bars.

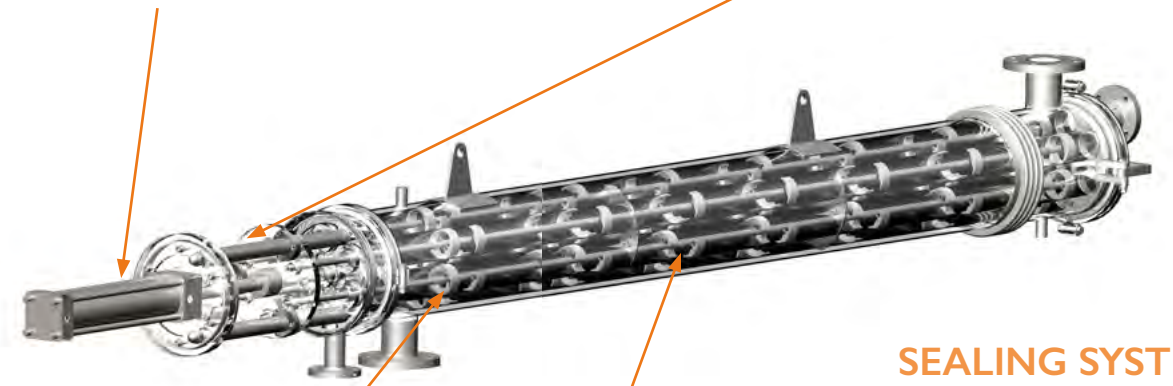

SEALING SYSTEM

A key component of the Unicus Series is the seal that separates the inner tube volume from the separation chamber. The seal prevents leakage of the product to the exterior. Several types of seals have been developed depending on the application.

SCRAPER BARS

Inside each interior tube, a scraper bar is fitted, which can move along the longitudinal axis of the tube.

SCRAPERS

Designed to be lightweight, resistant to the working environment and thermally efficient in order to allow easy movement of the scraping bars, reducing the weight of the unit and lowering its energy consumption.

Range of different scrapes available:

Scraper 120° mechanised

Scraper 180° mechanised

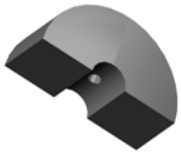

Scraper 180° compact

Scraper 360° with 3 holes

Scraper 360° with 3 holes and a peek ring

Scraper 360° with 6 holes and a peek ring

Some of the unique features of the Unicus Series include:

- Larger heat transfer area per unit
- Maintained product identity
- Increased uptime
- Reduced footprint
- Suitable for highly viscous fluids

HRS UNICUS SERIES

STANDARD SPECIFICATIONS

MATERIALS:

Service Side:	AISI 304 Stainless Steel
Product Side:	AISI 316 Stainless Steel

Other material options available

CONNECTIONS:

Service Side:	Flange
Product Side:	Clamp/Flange

All flange & clamp types available

SURFACE FINISH:

External:	Polished
Internal:	<0.8µ

DESIGN CONDITIONS:

Service Side:	10 bar/185°C
Product Side:	16 bar/185°C

Scrapers

APPLICATIONS

The HRS Unicus Series is suitable for heat transfer applications in a wide range of industries including:

- Dairy
- Fruits
- Vegetables
- Convenience Food
- Protein
- Confectionary
- Beverages
- Cosmetics
- Environmental Waste
- Biofuels
- Oil & Gas

HRS UK
+44 1923 232 335

HRS Spain
+34 968 676 157

HRS USA
+1 770 726 3540

HRS Malaysia
+60 3 8081 1898

HRS India
+91 20 2566 3581

HRS Australia
+61 3 9489 1866

HRS New Zealand
+64 9 889 6045

www.hrs-heatexchangers.com

U1911EN

PRODUCT BROCHURE:

HRS R SERIES

SCRAPED SURFACE HEAT EXCHANGERS

HRS R SERIES

The solution for high value viscous applications

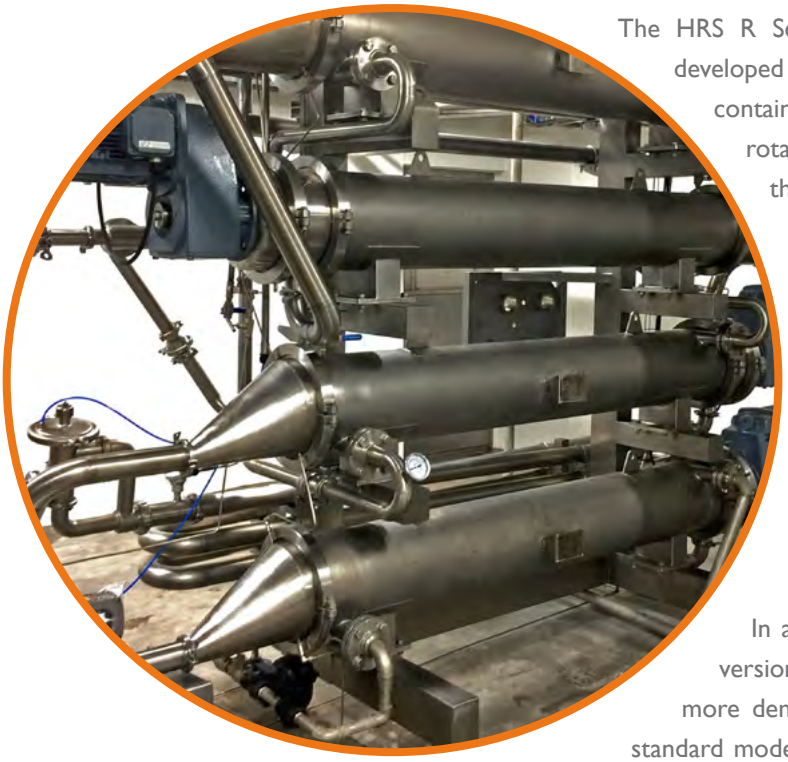

The HRS R Series is a rotary scraped surface heat exchanger developed for hygienic applications. Each inner tube contains a scraper bar fitted with a helical screw which rotates at high speed and enhances flow through the tube whilst reducing pressure drop. Furthermore, the continuous scraping action eliminates fouling on the inner tube wall, ensuring that the heat transfer area is clean at all times.

The HRS R Series technology uses a rotary scraper bar, which can reach speeds of up to 300rpm resulting in high levels of shear and mixing at the heat transfer surface; dramatically increasing the heat transfer rate.

In addition to the standard HRS R Series, a heavy duty version is available. The HRS RHD has been developed for more demanding applications and has all the benefits of the standard model. Features include a more powerful self-supported motor, larger scraper bar with additional scraper supports which enable the unit to be used under extreme conditions.

Some of the unique features of the HRS R Series include:

- Large heat transfer area
- Single and multiple tube options, all with removable tubes
- Reduced pressure drop
- High level of product recovery
- Low noise level gearbox
- Energy efficient
- Multipass version available

The HRS R Series is the ideal solution for high value viscous applications such as honey, treacle, custards and creams, where fouling or low heat transfer is a problem.

FEATURES

GEARBOX SYSTEM

Unlike other rotating scraped surface heat exchangers, the HRS R Series can use up to six heat transfer tubes in a single unit. This is made possible using a uniquely engineered gearbox system which transfers the energy of a single electrical motor to the scraper rods in each individual tube. In this way, a greater surface area can be achieved in a single unit. The gearbox design also gives the benefit of low noise level during operation due to the materials of construction.

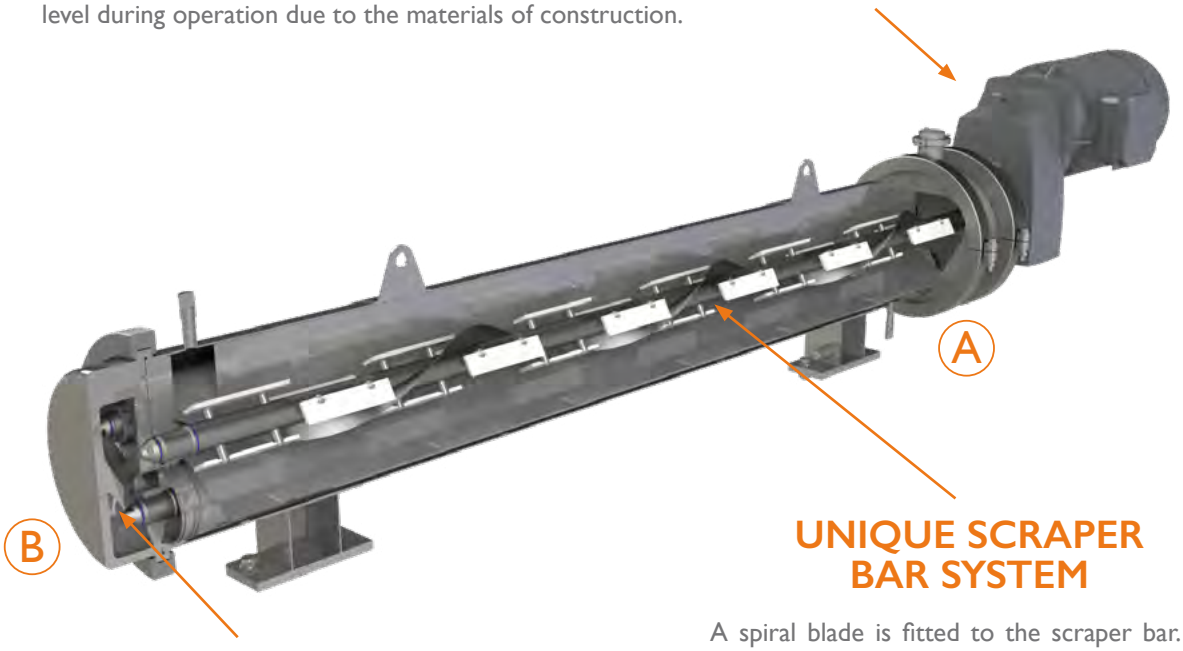

UNIQUE SCRAPER BAR SYSTEM

A spiral blade is fitted to the scraper bar. The rotating movement of this blade helps to push the fluid forward. This way, highly viscous fluids are pumped through the heat exchangers more easily resulting in less back pressure.

REMOVABLE INNER TUBES

The HRS R Series is fitted with removable inner tubes, each tube has a single mechanical seal at position A and guide ring at position B. Easy inspection and maintenance significantly reduces operational costs.

BAFFLE PLACEMENT

The design of the HRS R Series allows one or multiple heat transfer tubes to be fitted into one single heat exchanger shell, increasing the size of the shell side cross section. If the liquid shell side flow is limited then velocities, and therefore heat transfer are reduced on the shell side. To improve this, longitudinal baffles are fitted to separate the fluid paths in the shell; acting as an individual compartment for each heat transfer tube. The flow cross section is reduced and velocities increase, maintaining heat transfer rates. For multipass designs, complete counter-current flow between the shell side fluid and tube side fluid can be obtained.

In case of condensing (for example steam heating) or evaporating (for example ammonia cooling) fluids, the units can be designed without longitudinal baffles for better performance.

HRS R SERIES

FEATURES

Unique gearbox design reduces noise level

Multitubes are fitted into a single shell giving more heat transfer area

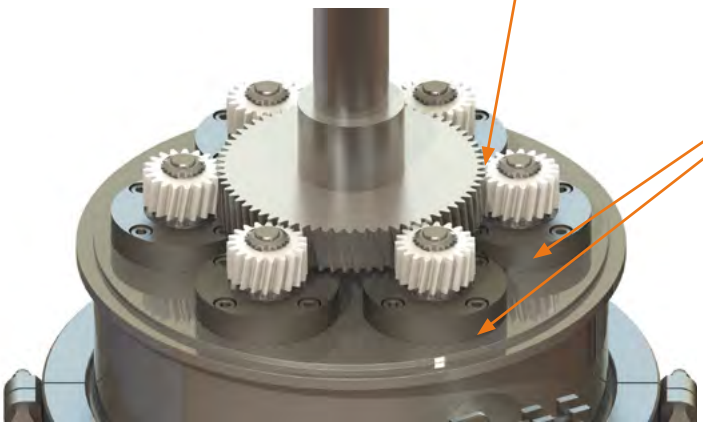

ROTATION:

Scrapers keep heat transfer walls clean

HELIX MIXING SPIRAL:

Reduces pressure drop and can be run in reverse for enhanced product recovery

PRODUCT FLOW:

Reduced fouling, good product identity and reduced pressure drop

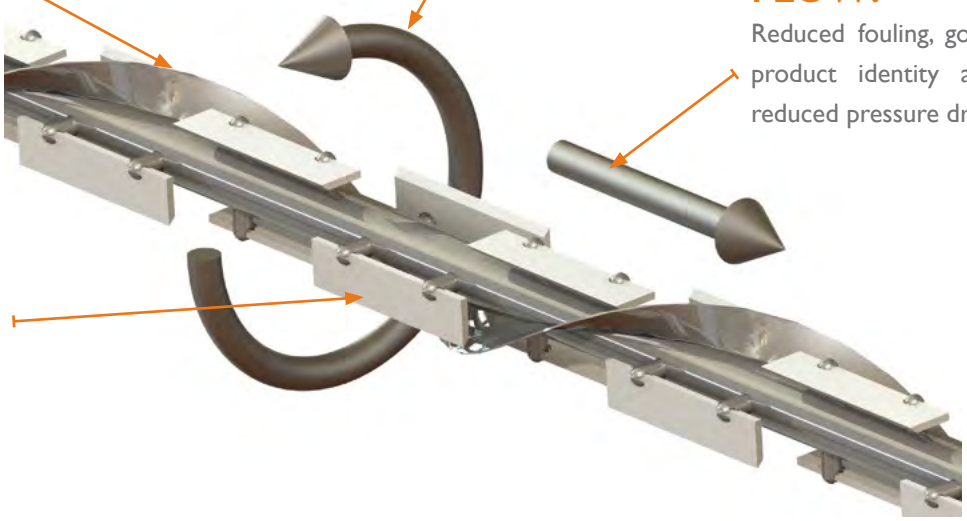

SCRAPER:

Scrapers are available in a metal detectable material

SEALING SYSTEM

This HRS R Series is fitted with a unique sealing system which enables the removal of individual tubes, resulting in easy servicing and replacement. This leads to a significant reduction in operating costs.

HRS R SERIES

STANDARD SPECIFICATION

CONSTRUCTION MATERIALS:

Service Side:	AISI 304 Stainless Steel
Product Side:	AISI 316L Stainless Steel

Other material options available

Scrapers:	PEEK, Metal Detectable PEEK
Gaskets:	EPDM, Viton, PTFE
Mechanical Seals:	Carbon, Silicon Carbide, Tungsten Carbide

CONNECTIONS:

Service Side:	Flange
Product Side:	Clamp

All flange & clamp types available

SURFACE FINISH:

External:	Polished
Internal:	<0.8µ

HRS RHD Series

DESIGN CONDITIONS:

Service Side:	10 bar/185°C
Product Side:	21 bar/185°C

POWER:

Standard R Series:	4kW - 30kW
Heavy Duty RHD Series:	7.5kW - 55kW

APPLICATIONS

The HRS R Series is suitable for heat transfer applications for wide range of products including:

- Viscous Food Products
- Convenience Foods
- Protein
- Cosmetics
- Oil & Gas

HRS UK
+44 1923 232 335

HRS Spain
+34 968 676 157

HRS USA
+1 770 726 3540

HRS Malaysia
+60 3 8081 1898

HRS India
+91 20 2566 3581

HRS Australia
+61 3 9489 1866

HRS New Zealand
+64 9 889 6045

www.hrs-heatexchangers.com

R1902EN